Product Sales Guide: TriCaster®Mini Advanced

All information included in this Product Sales Guide is confidential and subject to change without notice.

TriCaster Mini Advanced Positioning

High-level description
The most complete, compact multimedia studio in the world.

Target buyers

- People who don't produce video professionally, but want to add streaming, multimedia or live video to their communications toolkits with the convenience of using off-the-shelf HDMI cameras
- Broadcasters who want to use their professional SDI cameras and equipment to produce top-quality, multi-camera video from any location
- Producers at all levels who want the benefits of NDI® and need the flexibility of a hybrid or end-to-end IP workflow, but require a production solution costing $10K or less

Their requirements
Produce and publish video content quickly, stream live events from anywhere, and make even the smallest presentations look like network television

Unlike other solutions that
Provide limited capabilities to justify an entry-level price, or require expensive equipment, complex setup and a professional crew

TriCasterMini Advanced
Provides a full suite of creative production capabilities to allow anyone turn the smallest productions into engaging video content—no matter where they happen to be.

TriCaster Mini Advanced Models

TriCaster Mini Advanced SDI

- Built for producing top-quality professional video using SDI equipment and/or IP video sources
- Hundreds of entry-level and advanced capabilities for switching, streaming, recording, and publishing
- Space-saving case display for real-time video monitoring
- Full capacity multimedia storage for playback and capture

TriCaster Mini Advanced HDMI

- Ideal for creating live and on-demand video with prosumer HDMI cameras and/or IP video sources
- Hundreds of entry-level and advanced capabilities for switching, streaming, recording, and publishing
- Space-saving case display for real-time video monitoring
- Full capacity multimedia storage for playback and capture

TriCaster Mini Advanced Core Messages

Positioning Statement
NewTek TriCasterMini Advanced is the most complete, compact multimedia studio in the world. With an all-in-one design, do-it-yourself setup, and hundreds of entry-level and advanced capabilities for live switching, streaming, recording, media publishing, and more, it allows anyone to produce extraordinary video content from anywhere.

Value Proposition Statement
You don't have to be a video expert, own a studio, or know your way around a broadcast control room to deliver your message through video with television-quality results. With NewTek TriCaster Mini Advanced, you can be on your way to making a show within minutes of opening the box. With a streamlined design and familiar cable connections, you can get up and running quickly and easily, and with hundreds of entry-level and advanced video capabilities built right in, it gives you everything you need to produce extraordinary multimedia content from anywhere, stream it live, and publish it for your audience.

Elevator Pitch
NewTek TriCasterMini Advanced is the most complete, compact multimedia studio in the world. Incredibly portable, with a simple setup, familiar A/V connections, and user-friendly tools and controls, it lets anyone, anywhere, get up and running with multi-camera video production within minutes of opening the box—no professional installation or expertise required. And with hundreds of entry-level and advanced video capabilities for live switching, streaming, recording, publishing, and more, it has everything that both newcomers and experienced professionals need to produce extraordinary multimedia content for screens and audiences of all sizes—no matter where they happen to be.

Unique Selling Proposition
No singlevideo solution is as complete, compact, or cost-effective for producing professional-looking video content.

TriCaster Mini Advanced Supporting Messages

More Value
Now including TriCaster Advanced Edition software, TriCaster Mini Advanced brings new value to the popular TriCaster Mini line, integrating more than 100 additional video production capabilities compared to the original system platform—at no additional cost.

NDI®
TriCaster Mini Advanced natively integrates NDI®, NewTek's innovative Network Device Interface technology, making complete, end-to-end IP production workflows available to more producers at more levels on more budgets than ever before.

No Professional Setup Required
With TriCaster Mini Advanced, anyone can be on their way to making a show within minutes of opening the box. If you have ever set up a personal computer, game console, or home electronics, you can set up TriCaster Mini Advanced.

Easy to Learn with Room to Grow
Anyone with basic computer skills can start creating professional-looking video content immediately with TriCaster Mini Advanced. Then with practice and experience, you can quickly and easily work your way up to creating more sophisticated programs and more advanced production workflows, taking advantage of hundreds of integrated video capabilities, adding an optional hardware control surface, and working with a growing list of compatible third-party products and applications.

Lightweight and Portable
You don't have to lug around any big, heavy equipment, or deal with complicated logistics. The small footprint is perfect for creating and streaming content from your desktop, office, or event space – or packing in backpack or carry-on and making your show from anywhere.

Reach Every Audience
With little more than a camera and an Internet connection, you can produce television-quality video content for a global audience. Stream live to Facebook, add videos to your YouTube or Vimeo channel, post clips and grabs to Twitter or LinkedIn – and engage all of your social networks simultaneously.

Saves Money
TriCaster Mini Advanced integrates a studio full of production capabilities into one compact solution—eliminating the multiple equipment investments required to get anything close to equivalent functionality from comparably-priced alternatives.

TriCaster Mini Advanced KeyBenefits

TriCaster Mini lets anyone create great multimedia content

- Use everyday camcorders or professional cameras with plug-and-play ease and get network-quality results
- User-friendly software interface and simple controls to start creating video immediately
- Room to learn, grow and evolve your show with hundreds of built-in capabilities

TriCaster Mini is fast, straightforward, and easy to setup

- All-in-one design with the same plugs and ports you know from your home electronics or your current equipment
- No complicated software installation or hardware configuration
- Ready to go live right out of the box

TriCaster Mini has everything you need built right in

- Switch cameras, build video playlists, add graphics and titles, mix audio, and impress with special effects like virtual sets and animated transitions
- Use computers, smartphones, and other compatible third-party products as video sources over the network
- Broadcast, live stream, project, record and publish – simultaneously – to deliver content to screens and audiences of all sizes

TriCaster Mini is sized to make and stream content from anywhere

- Compact design sized just right for any office, event space, or desktop
- Lightweight and portable for making your show on the go
- Built-in case display for monitoring video output on select models

TriCaster Mini saves you money

- Eliminates the need for a studio full of expensive production equipment and a professional crew
- Doesn't require multiple equipment purchases for a complete production workflow
- Reduces overall cost of ownership for newcomers and cost-conscious professionals

TriCaster Mini Advanced Key Features

ADVANCED IP WORKFLOW	
Video Over IP	Send and receive real-time, low-latency, frame-accurate video over IP on a standard network infrastructure via NDI™, NewTek's innovative Network Device Interface technology, with any NDI-enabled device on the same LAN available as a video source or destination.
Audio Over IP	Send and receive multi-channel audio over IP on a standard network infrastructure via NDI, NewTek's innovative Network Device Interface technology, with any NDI-enabled device on the same LAN available as an audio source or destination.
IP Source Selection	Access both the inputs and outputs of all NDI-enabled devices on the same network from any external input on the TriCaster switcher—dramatically increasing the amount of available video sources for any production.
IP Outputs	Distribute more video from your system, sending output signals, sub-mixes or individual sources to NDI-enabled devices with 4 fully configurable, IP video outputs.
AUDIO	
Audio Capabilities	Manage and monitor sound with multi-channel audio mixing, including configurable settings for all internal and external audio input sources, and 4 stereo output mixes.
Audio Recording Options	Configure the captured audio source for each ISO recording with per-channel audio signal selection
Audio Routers	Apply more sophisticated audio routing configurations, mapping any input channel (or combination of input channels) to any output channel (or combination of output channels) with four complete 4x4 routers for every audio input.
Dante Audio Networking*	Expand integration and IP workflow possibilities with audio input over the network from devices that use the Dante networking protocol from Audinate. ** Requires Dante Virtual Soundcard license from Audinate (sold separately)*
Default Media File Level	Reduce time spent individually configuring audio levels for non-native clips and sound files by assigning a preset level to all files added to media players.
Input Level Control	Fine-tune sound with independent control of every audio channel—up to 4 per input.
Noise Gate	Manage audio signals with greater precision using new noise gate settings in the audio mixer to exclude unwanted low-level sounds.
Output Audio	Deliver pitch-perfect sound mixes for any setup, supplying audio signals via four IP-ready, quad-channel output buses—Master, Aux 1, Aux 2 and Aux 3.
VU Meters	Achieve higher-quality sound by determining audio clipping easily and accurately with an updated VU meter interface.
DATA	
DataLink Integration	Use real-time data from internal and external sources in your live program without adding dedicated data input software. Built-in DataLink™ maps your selected data source to titles, comments, file names and other fields in graphics templates, and updates their corresponding content instantly—automatically or on-demand—ensuring you have the most current and accurate information.
DataLink File Watcher	Save time converting detailed information like sports statistics and sales data into graphics. With DataLink and a CSV, XML or ASCII file, you can transform raw spreadsheet data into production-ready title pages that can be edited and updated in real time.
AUTOMATION	
System Processing	Record, store, edit and automate commands and operation sequences.
Multi-Step Macros	When timing is everything but anything can happen, take control by creating automated

	sequences using macro commands with expert pacing and built-in pauses that wait for your (live) cue to resume.
Macro Triggering	Gain additional flexibility for activating automated macro sequences, with new triggers that include audio level changes, media playback, and specific switcher actions, and the ability to assign multiple triggers for the same macro.
X-keys Support	Easily configure any quantity or combination of compatible X-keys controllers for macro automation, with integrated support eliminating the need to program devices using keystroke codes and combinations.
MEDIA PLAYERS	
Extend Play	Keep video clips rolling up to the very last frame with an optional AutoPlay setting that continues playback even when a custom Out point is set or a DDR is no longer selected on the Program row.
Playlist Effects	Produce more engaging playlist sequences by adding transitions between playlist media—and even combining real-time, slow-mo, and fast-mo with per-clip playback speed settings.
Real-Time Clip Editing	Speed up turnaround of raw recordings and video files for DDR playback or post-production with easy, built-in clip splitting and trimming tools.
MONITORING	
Display Outputs	Choose from more video signal selections to monitor, display or project using the supplemental display outputs—and customize every screen in your setup to your workflow from a single user interface, to a dual-display workspace, to a quad-monitor control center
Blue Only Option	Calibrate video signals with greater flexibility and accuracy with a Blue Only viewport overlay compatible with any monitor.
Live Output Monitoring	Work with higher-quality output video previews with enhanced signal processing and full field-rate deinterlacing.
Monitor Proc Amps	Compensate for environmental lighting conditions and external display settings with configurable color settings for the User Interface, Multiview, and display ports.
Multiview Scopes	Calibrate video signals with greater precision using large waveform and vectorscope displays on Multiview.
OPERATION	
Control	Use point-and-click software interactions, add an optional hardware control surface, or break out control to any number or combination of compatible devices.
Button Lock	Protect your live program from accidents or mistakes by locking CS buttons to their current state.
Clean M/E Output	Optionally elect to output an M/E sub-mix without real-time overlays for flexible downstream use or archive.
Control Surface Mapping	Access additional video sources directly from companion control surfaces, with revised CS button mapping for the updated switcher layout.
Control Surface Support	Pair your choice of TriCaster control surfaces with your system, with universal support for all current CS models.
Hardware Configuration	Streamline hardware setup with local input and output connections centralized to a single configuration panel.
IP Network Tally	Reduce on-air mistakes with visual indication of on-air status supplied over the network to compatible devices sending output to your system over IP.
LTC	Automate external timecode configuration for your TriCaster production—including 24-hour wraparound—simply by plugging in an LTC timecode source.

Metadata	Attach comments to sources, clips, and images to simplify and sophisticate your workflow at the same time. DataLink uses comments as internal data sources to feed titles, label published content, enter metadata and more.
SDI Auto-Detect	Save time during SDI system setup, with automatic detection of resolution and frame rate for most session-format SDI cameras.
Session Recordings	Locate and verify active and completed recordings more quickly with a dedicated Session Recordings browser folder.
UI Enhancements	Work more efficiently and keep a closer eye on the show with new visual indicators, updated shortcuts and control tools, hover tooltips and other on-screen improvements.
Video Layer Management	Easily identify, monitor, and manage switcher BKGD, DSK and KEY layer video sources in real time, with enhanced controls that include full-time, full-motion confidence monitors and an integrated layer priority system.
PUBLISHING	
Delivery	Deliver to multiple destinations simultaneously—over the air, across the network, to local displays and projectors, and to live streaming and social media sites.
Alpha Grabs	Grab stills from local bins – complete with alpha channel transparency – for publishing or post-production use
Flex Media Publishing	Publish more files to more places in more formats using an upgraded publishing workflow that also supports file import while live, export and transcoding right.
Grab Configuration	Snap screenshots from your show with new Grab controls, optionally capturing stills right from any external switcher video source or simultaneously capturing a collection of stills from any combination of the four outputs.
Multi-Account Publishing	Maximize productivity and reach more friends, fans, and followers with the ability to publish media to multiple user accounts on the same social network simultaneously.
Publish Targets	Share media from your production with even more online communities, with new publishing destinations that include Imgur, LinkedIn, Vid.me, and Vimeo.
RECORDING	
H.264 Distribution Recorder	Optionally capture any individual mix output to a compressed H.264 file format for convenient distribution immediately following your production with an independently configurable distribution recorder.
MP3 Audio Recorder	Optionally capture an audio-only recording of any selectable input or output with an independently configurable MP3 audio recorder.
REPLAY	
In-Show Replay Controls	Turn everyday productions into drama relived, without adding extra hardware or crew. Capture and replay highlights of the live show, with on-screen controls and other replay elements, including intro and outro transitions, clip speed and duration, angle selection and auto-playback action – with a single button press.
RESOURCES	
Automation and Integration Guide	Expand your knowledge and your program's potential with a detailed guide to macros, shortcuts, advanced automation and integrated production with TriCaster.
Developer Library	Get even more out of your system's deepest functionality and expand your entire production ecosystem using new tools and examples to develop your own workflow extensions.
STREAMING	
Enhanced Live Streams	Simplify your webcast workflow with easier setup and new one-click presets (including Facebook Live, Microsoft Azure, Twitch.tv, and YouTube Live), and upgrade your online presence with higher-quality live streaming video.

Multi-Platform Live Streaming	Multiply your potential audience without adding a new encoder, reach more viewers and attract different audiences by live streaming to multiple platforms and services simultaneously.
SWITCHING	
Digital I/O	Plug-and-play input of up to four SDI cameras OR four HDMI cameras to produce live video with professional-quality resultsin resolutions up to 1080p 30
Mix Effects	Configure 4 M/E buses, each supporting 2 sources and 2 independent overlays, for sub-mixing, multi-layer compositing, and live virtual sets.
Auto Labeling	Maintain visual confirmation of active live inputs with the option to allow switcher buttons to be automatically labeled for their corresponding NDI sources.
External Input Configuration	Freely configure the external inputs on the switcher for any combination of connected cameras, hardware video sources, or IP video sources.
Input Filtering	Easily locate and select the desired input from the list of all available hardware and NDI sources with a precision filtering mechanic and thumbnail source previews.
PREVIZ System	Configure and preview settings for the switcher or M/Es with sandbox-style control on a discrete bus, then take live or apply across multiple buses with copy-and-paste simplicity.
Router Support	Expand camera coverage by connecting to a compatible upstream video router, then selecting and switching between router sources directly from the interface.
Switcher Inputs	Access live sources with 8 external inputs on the switcher.
Switcher Banks	Access and mix with all sources from the switcher, including every new input and buffer, with two tabbed button banks and 16 MEM slot presets
Undo/Redo	Avoid the stress of troubleshooting and backtracking by handling unwanted changes or unintended results instantly with undo and redo commands.
VISUAL	
Virtual Sets	Transform any location into an elaborate virtual environment with integrated LiveSet™ technology, compositing live video sources into beautifully-rendered scenes that can include multiple angles, virtual camera movements, real-time reflections, specular highlights, and augmented reality elements
Augmented Reality KEY Layers	Add another dimension to virtual set scenes with locking KEY layers that track with LiveSet™ zoom and pan movements—making them appear as part of the set instead of just overlays.
Auto Color	Reduce manual effort in correcting for variable lighting conditions and camera settings (especially at outdoor events that often require a dedicated shading station), with automatic color matching between video inputs.
Border Effects	Create and customize on-screen elements and boost your production value with more detailed compositions, sophisticated visuals, and custom multi-box effects by adding borders and shadows to video layers.
Buffers	Gain 5 animation buffers to access and playback stored animations, motion graphics, and looping clips without sacrificing the DDRs.
Image Processing	Present even more polished visuals with enhanced processing of still images and graphics, plus higher-quality LiveSet rendering and scaling.
TransWarp Effects	Design and present custom, full-color animated transitions and effects, complete with transparency, embedded audio, and real-time 3D video warping.
Video Tools	Customize production elements with configurable color correction tools, 3D object positioning, cropping, and keying, and comprehensive video layer management.
LiveSet Lens Flares	Add an extra touch of realism to live virtual set presentations, with enhanced LiveSet technology providing the option to display animated lens flares that respond to changes in

	virtual camera positions.
LiveSet Presets	Configure and save 8 additional shot presets for any LiveSet effect, with 16 available slots.
Second KEY Layer	Create more sophisticated visuals with each M/E now including a second KEY layer to add titles, graphics, and video overlays.
Creative Extras	Accept even more image files without conversion, with support for formats like JPEG-XR, JPEG2000 and WebP; compose shots and sequences using new additive and non-additive fade transitions; configure LiveMatte™ visuals using a new Lumakey setting; and easily incorporate explanations, descriptions, quotes and more with title pages that support paragraph text.
WEB	
TriCaster Home Page	Access IP management tools such as the DataLink for TriCaster extension, plus updates, downloads, documentation, tutorials, customer service, and more from a system-specific TriCaster Home Page accessible from your phone, tablet, or laptop – any supported device on the same network.
DataLink for TriCaster	Use any text or image from the Web as content in your live production without complicated integration. Simply add the extension to your Google Chrome browser on any external computer, and use DataLink to send data, photos, social media posts, and more across the network to instantly populate or update the designated title or graphic in TriCaster.

Subject to change without notice.

TriCaster Mini Advanced Technical Specifications

Video Input	8 x simultaneous external video inputs, supporting any combination of compatible sources
Network Video Input	8 x IP video inputs via NDI®, resolution-independent, with support for key and fill
Digital Video Input	4 x digital video connections (HDMI or SDI, depending on model) supporting video input in any combination of standard formats, resolutions, and frame rates[1] • 1080p: 29.97, 25 • 1080i: 59.94, 50 • 720p: 59.94, 50, 29.97, 25 • SD: 59.94, 50, 25 [1] *Available frame rates determined by model and session video standard (NTSC or PAL)*
PTZ	Support for up to 8 simultaneous Pan-Tilt-Zoom (PTZ) robotic cameras via serial and network protocols, including RS232, RS422, and IP, with integrated controls and preset system
Video Output	Configurable for up to 4 independent video mix outputs, with simultaneous digital and IP delivery
Network Video Output	4 x independent IP video mix outputs via NDI®
Digital Video Output	2 x independently configurable digital video outputs (HDMI or SDI, depending on model)
Stream Output	2 x streaming video output, independently configurable, with simultaneous stream archive
Monitor Outputs	4 x Mini DisplayPort with multiviewer
Mix/Effect Buses (M/E)	4 x M/E buses, each supporting 2 configurable sources and 2 configurable KEY layers 1 x PREVIZ configuration and preview bus
DSK Channels	2 x DSK channels
Media	5 x media players • 2 x DDR • 2 x GFX • 1 x Sound 15 x media buffers • 5 x animation buffers • 10 x graphic buffers
Keyers	Integrated LiveMatte™ chroma and luma keying technology on all source channels and M/E buses
Virtual Sets	Integrated LiveSet™ technology with 30+ live virtual sets and box effects included
DataLink	Integrated DataLink™ technology enabling real-time, automated data input from internal and external sources, including webpages, spreadsheets, scoreboards, databases, RSS feeds, watch files, XML, CSV, ASCII and more
Macros	Record, store, edit and automate commands and user-configured operation sequences • Attach to control panel buttons, keyboard shortcuts, hotspots, MIDI and X-keys® buttons or GPI triggers • Attach to internal events and state changes, including audio, media playback, tally and specific switcher actions • Supports control via web-based interface
Recording	5 x configurable video recording channels via IsoCorder™ technology • 4 x QuickTime® archival video recorders (XDCAM HD compatible, 4:2:2 encoding, 24-bit audio, with timecode)[2] • 1 x H.264 distribution video recorders (multiple profiles) 1 x MP3 audio recorder [2] *QuickTime Player not required for playback in common NLE applications*
Storage	1 x 1TB internal drive • Capacity varies by format, resolution and file specification • Supports recording to external storage via USB 3.1 and USB-C • Supports shared storage integration and third-party partner solutions
Grab	Grab full-resolution, deinterlaced still images from external video sources and outputs
Export	Export video and image files to social media, FTP, local or external volumes, and network servers, with optional transcoding

Audio Mixing	Integrated multi-channel audio mixer with configurable DSPs, 4 x 4 x 4 audio input channel routing, and 4 independent output mixes
Local Audio Input	4 x embedded digital audio inputs (HDMI or SDI, depending on model) 1 x 1/4" (6.35 mm) balanced mic 2 x 1/4" (6.35 mm) balanced line
Local Audio Output	2 x embedded digital audio outputs (HDMI or SDI, depending on model) 2 x 1/4" (6.35 mm) balanced line 1 x 1/4" (6.35 mm) stereo headphones jack
Network Audio	• Native support for network audio input and output via NDI® • Embedded audio supported for all NDI® input and output video signals • Integrated support[3] for Dante™ networking protocol from Audinate® [3] *Requires Dante Virtual Soundcard license from Audinate (sold separately)*
Supported Media File Formats	Import, store, and play back multimedia files, with optional transcoding, including: • Video: AVI, DV, DVCPro, DVCProHD, FLV, F4V, H.263, H.264, MOV, MKV, MJPEG, MPEG, MP4, WMV, WebM, and more • Image: PSD, PNG, TGA, BMP, JPEG, JPEG-XR, JPEG2000, EXR, RAW, TIF, WebP, and more • Audio: AIFF, MP3, WAV, and more
Signal Monitoring	Integrated waveform and vectorscope, full field rate with digital calibration, color preview and support for ITU-R Rec. 709
Processing	Video: Floating Point YCbCr +A 4:4:4:4 Audio: Floating Point, 96 kHz
Throughput Latency	~1.0-2.0 frames
A/V Standards	• HD-SDI video conforms to SMPTE 292M • SD video conforms to SMPTE 259M and ITU-R BT.656 • Analog audio levels conform to SMPTE RP-155
Tally	Support for network tally via NDI®
MIDI	Support for standard MIDI protocol enabling third-party device control
NIC	2 x 1 Gigabit NIC
Built-In Bluetooth	Support for keyboard and mouse using wireless Bluetooth technology
System Physical	NewTek Mini system chassis, including adjustable handle and cable retention bracket • 4.23 x 9.08 x 7.89 in (10.74 x 23.1 x 20.1 cm) • 8.4lbs (3.8 kg)

Subject to change without notice.

HDMI and SDI models available. Hardware configuration and specifications vary by model, including video and audio input and output connections, recording and storage capacity, supported SD session formats, and availability of case display.

Reference

PRODUCT COMPARISON MATRIX			
	TC1 Mini Advanced	TC 410 Plus	TC Mini 4K
UHD Capable	No	No	Yes
3G HD Capable	No	Yes	Yes
Source Channels	27	27	25
External Inputs	8	8	8
UHD Inputs	No	No	8
Skype TX Integration	1 channel	1 channel	1 channel
Combined Outputs (max)	13	13	8
Video Mix Outputs	4 4 x 1.5G HD	4 4 x 3G SDI (2 x Independent)	2 1 x 4K UHD
Independent Stream Outputs	1	2	2
M/Es	4	4	4
Media Players	2x DDRs 2x GFX	2x DDRs 2x GFX	2x DDRs
Multiviewers	3	3	3
Network (NIC)	2x 1 Gigabit	2x 1 Gigabit	2 x 1 Gigabit
Audio Channels (per input)	4 channels	4 channels	2 channels
Audio Input Routing	4 x 4 x4	4 x 4 x 4	0

Subject to change without notice.

NewTek TriCaster Mini Advanced Connectivity

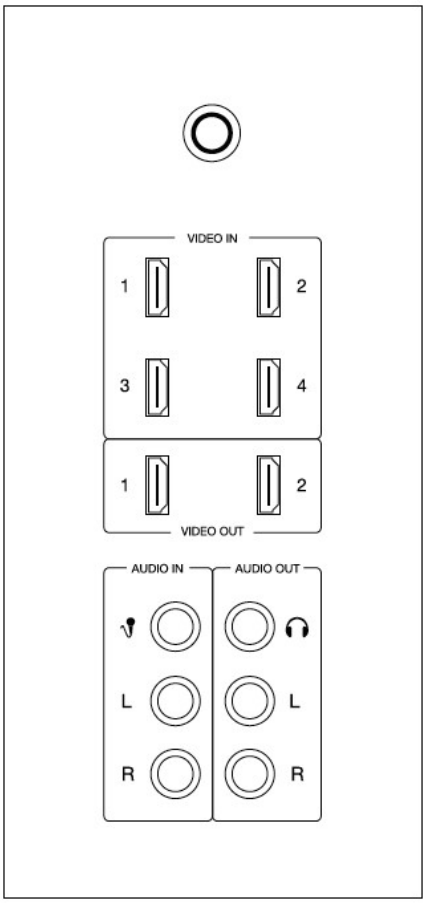

Mini HDMI Front

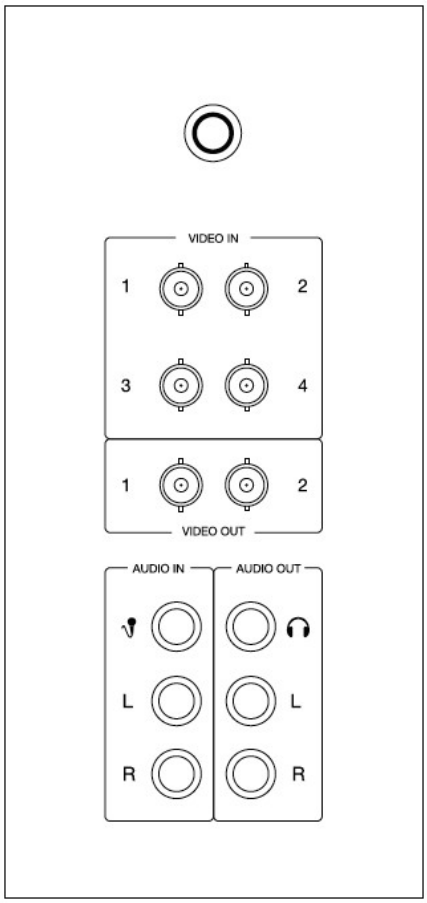

Mini SDI Front

Rear

NewTek TriCaster Mini Advanced Hardware Dimensions

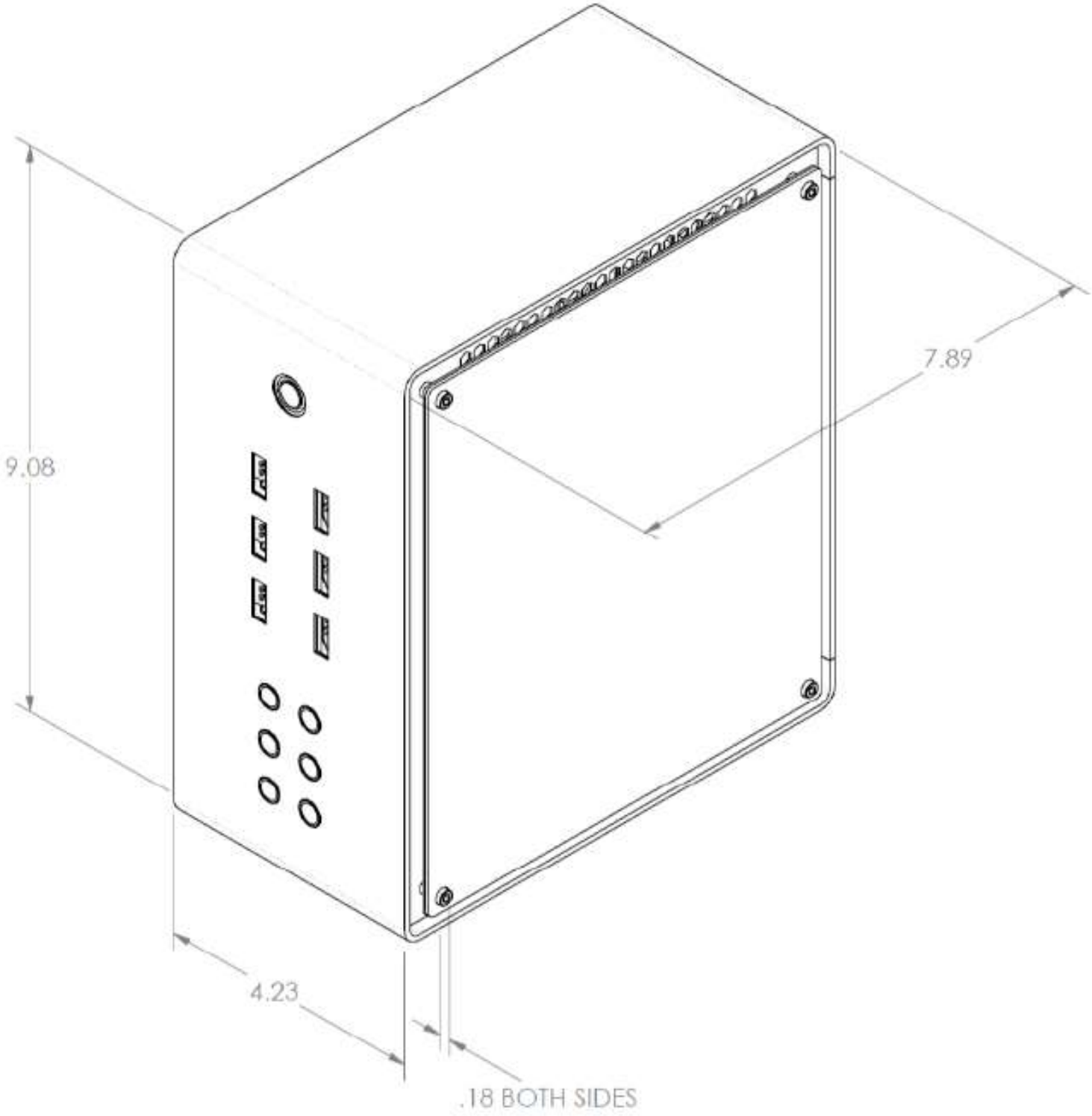

FAQ

Q: How are the current TriCaster Mini Advanced models different from the previous version?

The updated models have substantially upgraded components.

Quad output nVidia Quadro based card

- More powerful real time advancedprocessing including full use of CUDA for increased quality, hardware assisted encoding, decoding and streaming
- Multiple multi-viewer support and the required adapters in the box from the 4 Mini DisplayPorts for 4 HDMI outputs as needed

Dual 1Gb Ethernet connections

- Increased IP Connectivity
- Sharing and load balancingof bandwidth across multiple connections using NDI version 4 doulbes the amount of NDI traffic providingmore powerful media connectivity and expansion

Internal 1 TB SSD storage

- Faster boot and load times
- Increased recording capabilities
- Higher reliability

PortableStorage Interfaces

- USB 3.1 and USB-C ports for more recordings to occur at once on external drives

Power supply

- Quieter and much more reliable unit
- 180watts

Windows 10

- Increased performance
- Fewersecurity concerns
- Future ready for new drivers and hardware

Changing to the nVidia Quadro card with entirely configurable outputs and so many external monitoring choices now, the small display on the case is no longer offered.

Q: How is TriCaster Mini Advanced different from the original TriCaster Mini?

TriCaster Mini Advanced ships with TriCaster Advanced Edition software included and installed, improving upon the feature set of the original TriCaster Mini system platform and increasing the value to customers by integrating more than 100 additional video capabilities at no additional cost, while eliminating the need to purchase and install the TriCaster Advanced Edition software add-on separately.

Most notably, TriCaster Mini Advanced now makes the popular TriCaster Mini line fully capable of an end-to-end advanced IP workflow, via native integration of NDI®, NewTek's innovative Network Device Interface technology, along with increasing the I/O capacity to a total of 8 external inputs and 4 video mix outputs – all of which support NDI®.

Q: How are the TriCaster Mini Advanced models different?
TriCaster Mini Advanced models all share the same software-driven live production technology, but the hardware configuration varies from model to model, with the following differences:

I/O

- TriCaster Mini Advanced SDIincludes SDI inputs and outputs, with embedded audio.
- TriCaster Mini Advanced HDMI includes HDMI inputs and outputs, with embedded audio.

Q: Does TriCaster Mini Advanced accept HDMI video sources that employ HDCP (High Definition Copy Protection)?
HDCP is respected. If an HDMI video source employing HDCP is connected to either TriCaster MiniAdvanced HDMI, it will display black rather than the protected content (ex. copy-protected Blu-ray or DVD video).

Q: Does TriCaster Mini Advanced accept standard HDMI cables or is the cable kit a required purchase?
For the convenience of customers who may require longer cable runs, NewTek has qualified the 4 x 100' cable kit for use with TriCaster MiniAdvanced HDMI. However, the cable kit is not a required purchase. Customers are free to use the HDMI cables or cable solutions of their choice that are compatible with their selected camcorders—at their own discretion.

Q: DoesTriCaster Mini Advanced accept video from a computer over HDMI (or over DVI with an HDMI converter)?
Yes.

Q: Some computer graphics cards can't be specified to output 59.94 – how does TriCaster Mini Advanced handle HDMI computer inputs that aren't timed to a specific clock rate?
Each TriCaster Mini Advanced HDMIincludes a switch for computer display correction in the configuration panel that, when enabled, automatically corrects clock rate mismatches.

Q: What about the video delay in HDMI cameras – canTriCaster Mini Advanced delay audio to sync?
The TriCaster Mini Advanced audio mixer includes per-input audio delay settings that can be configured to compensate for any upstream video delays.

Q: There is a port on the rear panel labeled HDMI IN – is this another input?

No. The port labeled HDMI IN on the rear panel is disabled. Connecting an HDMI camcorder (or other HDMI device) to this port will not supply video to TriCaster Mini Advanced. HDMI video input is only supported by the VIDEO IN ports on the front of TriCaster MiniAdvanced HDMI. HDMI video input is not supported natively by TriCaster Mini AdvancedSDI. Refer to the Connection Illustrations of this Sales Guide for additional reference.

Q: Does TriCaster Mini Advanced work with GoPro cameras?
TriCaster Mini Advanced HDMI is designed for cameras that output a video signal over HDMI (or via a suitable HDMI converter). In fact, the kit used for our introductory TriCaster Mini press briefing included a GoPro camera as part of the live demonstration. However, individual camera models and versions may send video out differently depending upon their manufacturer specs, and each customer's needs, projects, and budgets will vary, so NewTek doesn't make specific camera recommendations.

Q: Does TriCaster Mini Advanced support robotic Pan-Tilt-Zoom (PTZ) cameras?
Yes.

Q: What video formats does TriCaster Mini Advanced support?
TriCaster Mini supports 1080p, 1080i, 720p, SD 16x9 and SD 4x3 selections.

Q: Are there analog audio inputs and outputs?
Yes. TriCaster Mini Advancedincludes one balanced 1/4" (6.35 mm) TRS jack for microphone audio input and two balanced 1/4" jacks (L/R) for line audio input. TriCaster Mini Advanced also includes two balanced 1/4" jacks (L/R) for line audio output and one 1/4" stereo jack for headphones audio output.

Q: What are the electrical specifications of the 1/4" audio inputs and outputs?
+4dBu, balanced.

Q: Is there phantom power on the microphone input?
No.

Q: Does TriCaster Mini Advanced support a second external display for the Multiview and/or include display outputs for additional external monitors?
Yes and yes. Each TriCaster Mini Advanced model includes Mini DisplayPorts for the Interface monitor, the Multiview monitors, and onesupplemental display outputfor driving additional local monitors—to support a total of four external monitors.

Q: Is TriCaster Mini Advanced compatible with other TriCaster control surface models?
Yes.

Q: Is TriCaster Mini Advanced compatible with third-party devices and applications from the NewTek Developer Network?
TriCaster Mini Advanced is generally compatible with third-party devices and applications from the NewTek Developer Network, however compatibility may vary based on specifications and requirements.

Q: What kind of case can I carry it in?
TriCaster Mini Advanced is small enough to fit into just about any gear bag, backpack or carrying case. Just be sure to take the proper precautions (like you would with any other A/V gear or electronic device) when transporting it to ensure that it doesn't get damaged.

Q: TriCaster Mini Advanced seems to be geared towards presentations, conferences and other applications where mobility is key – does TriCaster Mini have integrated Wi-Fi capabilities?
TriCaster Mini will support wireless connections using standard Wi-Fi technology. While this presents an advantage for mobility and ease of use by allowing LANs to be deployed without cabling, network limitations that are not under TriCaster Mini's control may be encountered on a site-by-site basis—for example, bandwidth limitations, cross-interference from access points on the same channel (or a neighboring one), and even blocked access by others in the area. Because these network limitations can affect performance when attempting to live stream, publish or connect to networked devices in a high-density area (such as large corporate buildings and arenas where many people are operating Wi-Fi access points and other mobile devices)—a physical cable will provide the most robust streaming connectivity and is strongly recommended. The built-in Wi-Fi capability of TriCaster Mini Advanced should be used only at the operator's discretion.

Q: Will TriCaster Mini Advanced work with TalkShow?
Yes. TriCaster Mini Advanced can be configured to receive Skype video calls from TalkShow and send a return video feed over IP.TriCaster Mini SDI also supports direct connection with TalkShow via SDI.

Q: What is the workflow for recording to external devices?
For the target customer, the most practical option is recording over USB 3.1 or USB-C. TriCaster Mini Advanced includes several USB 3.1 ports on the rear panel and most high-speed external USB 3.1 drive systems should be suitable for dual-channel capture.

Q: There is a bracket with thumb screws that comes in the box – what is this for?
The cable retention bracket provides additional cable security and reduces the risk of accidental disconnects when attached to TriCaster Mini. Mounting and fastening the bracket to TriCaster Mini is optional.

Q: Can the cable retention bracket be used as a handle?
Yes, the cable retention bracket doubles as a handle. If you intend to use the bracket as a handle, please mount and fasten the bracket securely to prevent damage to TriCaster Mini.

Q: Will TriCaster Mini run on batteries?
No. TriCaster Mini requires external power for operation.

Is TriCaster Mini Advanced compatible with the NewTek Connect line of products, specifically the NC1 Studio Input Module and NC1 Studio I/O Module?
Yes.

TO BE CONTINUED…

Version Notes

December 20, 2017

- Initial release.

February 21, 2020

- HD-4i model has been deleted
- New information provided for updated HDMIand SDI models.